P50LE Series Surface Mount Plug P50LE-XXXP1-SML-TGF

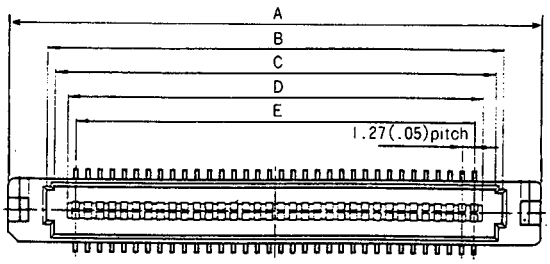

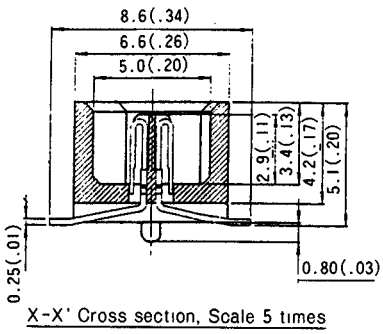

X-X' Cross section, Scale 5 times

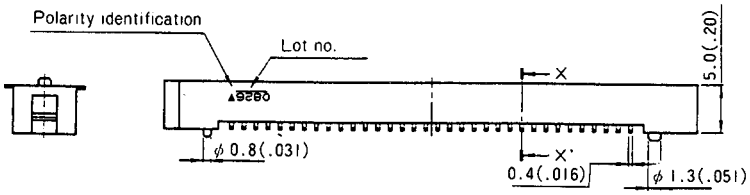

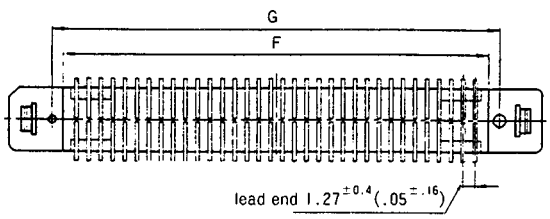

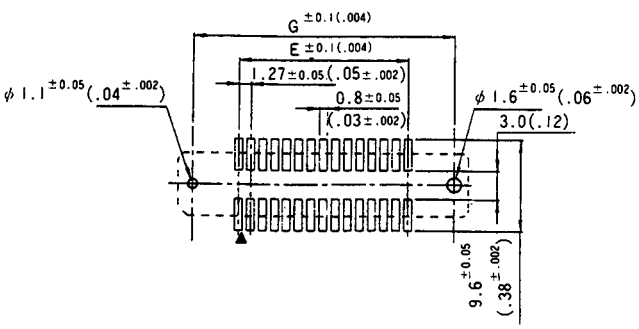

Printed Circuit Board Layout (component side view)

Dimensions are shown as mm(inch)

No. of Contacts	A	B	C	D	E	F	G
40	38.13 (1.50)	30.13 (1.19)	28.53 (1.12)	25.83 (1.02)	24.13 (0.95)	26.93 (1.06)	29.21 (1.15)
50	44.48 (1.75)	36.48 (1.44)	34.88 (1.37)	32.18 (1.27)	30.48 (1.20)	33.28 (1.31)	35.56 (1.40)
68	55.91 (2.20)	47.91 (1.89)	46.31 (1.82)	43.61 (1.72)	41.91 (1.65)	44.71 (1.76)	46.99 (1.85)
80	63.53 (2.50)	55.53 (2.19)	53.93 (2.120)	51.23 (2.02)	49.53 (1.95)	52.33 (2.05)	54.61 (2.15)
100	76.23 (3.00)	68.23 (2.69)	66.63 (2.62)	63.93 (2.52)	62.23 (2.45)	65.03 (2.56)	67.31 (2.65)